ONMS PON

Centralized Remote PON Test System

JDSU

ONMS PON – Centralized Remote PON Test System

JDSU ONMS PON minimizes truck rolls and ensures faster service turn up and restoration.

With the convergence of multiple service offerings in the marketplace, incumbent providers must ensure that services meet the quality of experience (QoE) expectations for users. Service providers must evolve their networks to withstand the rigors of bandwidth-intensive Triple-Play applications and contend with the increased competitive pressures while simultaneously delivering affordable services to customers. Many service providers are turning to the Passive Optical Network (PON) point-to-multipoint (P2MP) topology to meet these requirements. PON makes it possible to service multiple subscribers at a competitive price with a single fiber and optical line terminal (OLT).

Service providers who are migrating to PON need a fast and cost-effective method of turning up and restoring service. Traditional troubleshooting methods require time-consuming coordination between the central office (CO) and field personnel using portable devices to conduct testing. The JDSU Optical Network Management System (ONMS) PON test system allows operators to test passive optical networks via the JDSU ONMS. It enables technicians in the field to troubleshoot any leg of the PON by accessing an optical time domain reflectometer (OTDR) in the CO through a mobile phone or Web browser. The ability to perform single-ended measurements without involving a second person at the CO provides faster service turn-up, faster service restoration, and reduces the number of field personnel needed to maintain the PON system. JDSU ONMS also lets network operations center (NOC) operators check the current status of a fiber in seconds without formal training in the use of an OTDR.

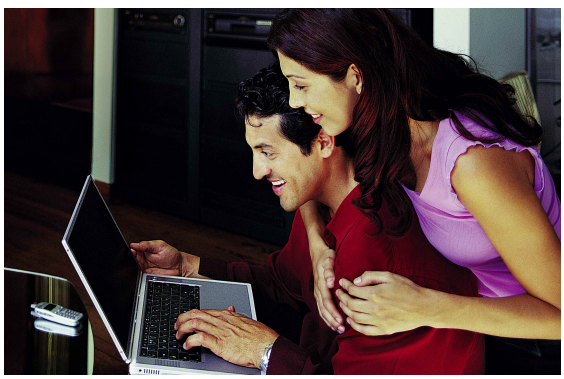

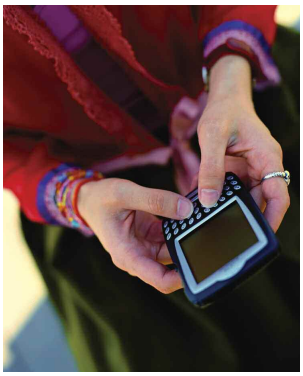

The JDSU ONMS PON test system is compatible with various PON technologies including G-PON, GE-PON, B-PON and the future NG-PON.

Equipment at the CO

The OTU-8000 remote test unit includes an OTDR and an optical switch that enables the selection of a PON test. This time-saving, cost-effective approach allows testing of any PON connected to the switch with a single OTDR. The ODTR uses a different wavelength than the one used by network traffic, permitting testing of the PON while it is in service. The latest ITU-T G.984.4 recommendation allocates the bandwidth between 1625 and 1670 nm for the test. The test wavelength can be inserted using the second splitter input, if it is available; if not, use of a wavelength-division multiplexer (WDM) is required.

Optical components at the PON termination

Optical components are installed at the PON termination to reflect the OTDR wavelength. This reflection produces peaks on the OTDR trace that is used to differentiate the various portions of the splitter. The distance from the origin to the peak corresponds to the position of the PON termination. The peak height identifies the optical power received at the PON termination.

Server application

The server application controls the OTU-8000s and stores the peak info in a database. When the reflector is installed, an association between the peak info (distance and height) and the PON termination is registered in the database. For further tests, the server application automatically checks measurements of peaks against values in the database to identify any degradation in the fiber between the CO and the PON termination.

Should degradation occur on a section where the OTDR can measure the fiber (usually before the first splitter), the system identifies the location of the degradation. Additionally, measuring the optical power when the reflector is installed enables estimation of the current received power.

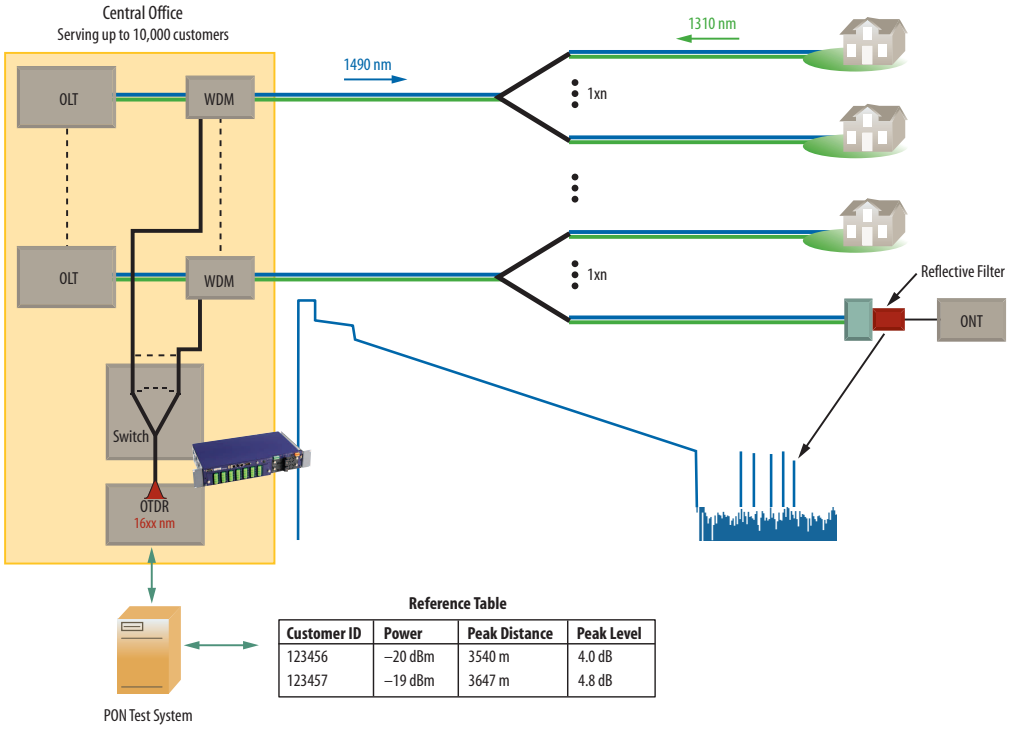

Reference Table

Customer ID	Power	Peak Distance	Peak Level
123456	–20 dBm	3540 m	4.0 dB
123457	–19 dBm	3647 m	4.8 dB

Figure 1: Schematic of the application

ONMS PON – Features

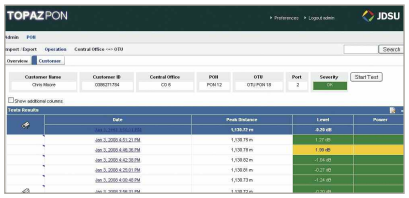

Open architecture

Integrating the ONMS PON system into the service provider's environment allows for the capture of information such as the PON termination identification, reducing the time required entering data in the system. Additional value is provided by capturing information from the element management system (EMS) of the OLT; for example, in order to test the PON when the EMS detects a fault.

Web-enabled application

ONMS PON software is fully web-based. A single license provides simultaneous access for all users, whether they are connecting through the local area network (LAN) or over the web. Users need only web-browser tools, such as Internet Explorer™ or Firefox™ to access the application.

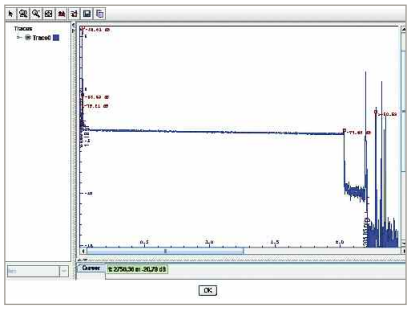

Mobile access

Technicians connecting new customers often find it difficult to obtain an Internet connection while in the field. In this situation, they can access the ONMS PON application from a mobile phone running Wireless Application Protocol (WAP).

Easy to use

Simply clicking on a fiber or customer name identifies the current status of the fiber, saving time and eliminating the need for network operations center (NOC) users or field technicians to learn how to use an OTDR. A simple process is also provided to guide technicians in placing the reflector.

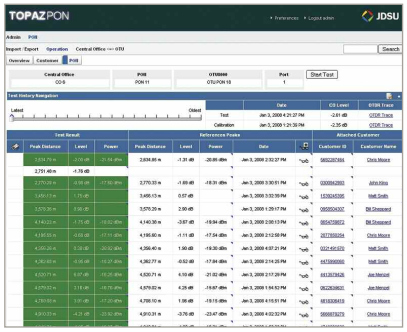

Advanced OTDR module

PON link lengths are relatively short so the event dead zone (EDZ) is the most important performance parameter. A low EDZ makes it possible to distinguish peaks caused by reflectors that are very close. JDSU offers a wide range of OTDR modules for the OTU-8000 that provide the lowest available EDZ values, making it possible to distinguish optical events that are less than one meter apart.

High-capacity switches

A CO can serve tens of thousands of customers, so it must manage hundreds of fibers. JDSU has developed a new high-capacity switch series that provides a high concentration of ports in a single unit. The new switches reduce the space and energy required to operate a remote test system.

Reflector

A reflector is installed at each termination to reflect the test wavelength (1610 to 1650 nm). JDSU provides reflectors that create *minimum* insertion loss or reflectance in the traffic bandwidth and are economical, easy-to-install, and reliable.

JDSU

Test & Measurement Regional Sales

NORTH AMERICA	LATIN AMERICA	ASIA PACIFIC	EMEA	www.jdsu.com/test
TOLL FREE: 1 866 228 3762	TEL: +1 954 688 5660	TEL: +852 2892 0990	TEL: +49 7121 86 2222	
FAX: +1 301 353 9216	FAX: +1 954 345 4668	FAX: +852 2892 0770	FAX: +49 7121 86 1222	

30162750 000 0609 ONMSPON.BR.FOP.TM.AE June 2009